Rev #			
Rev #			

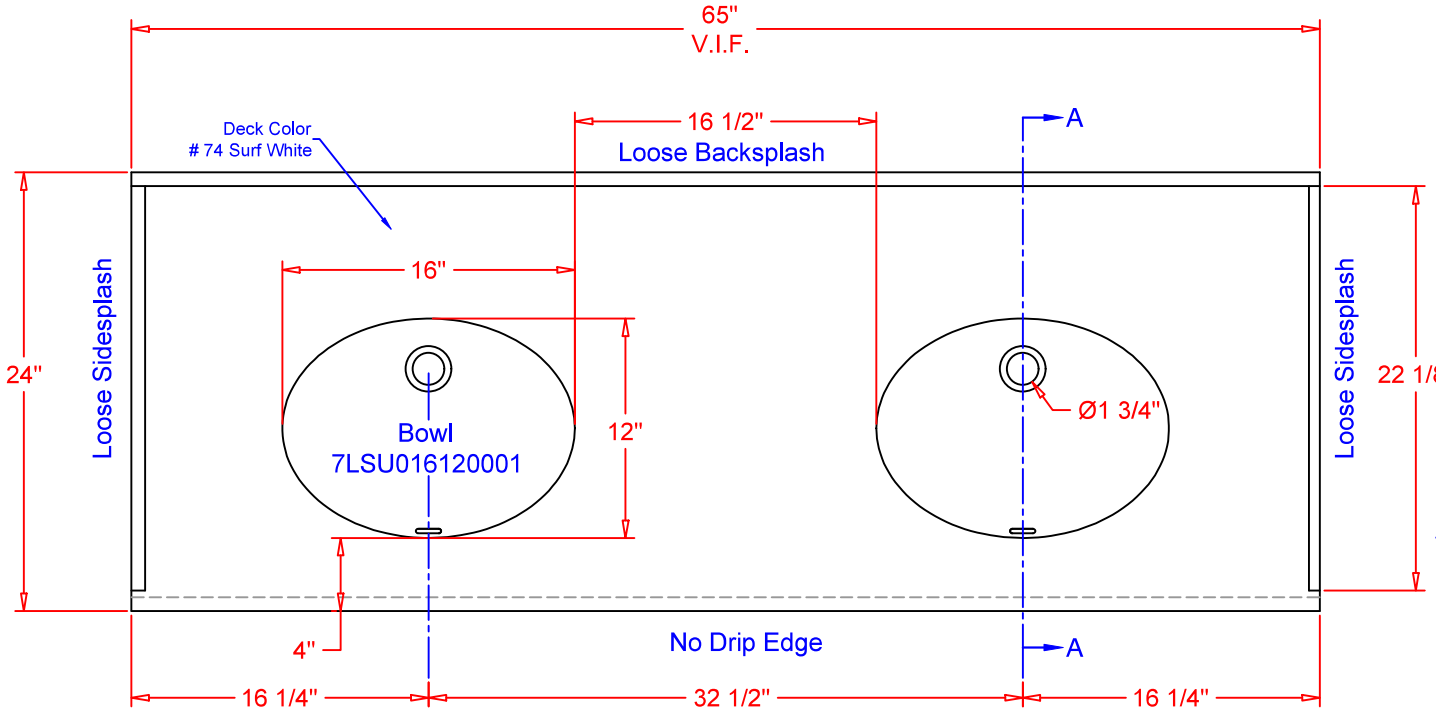

SECTION A-A

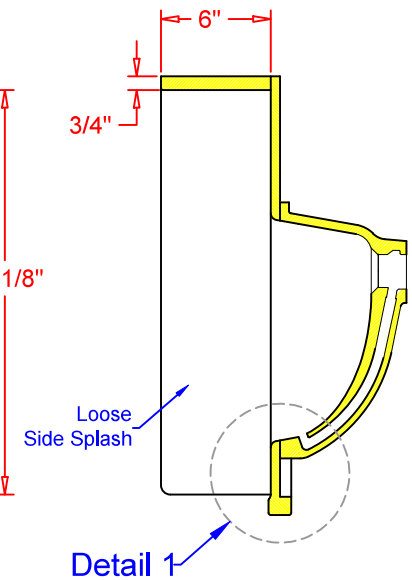

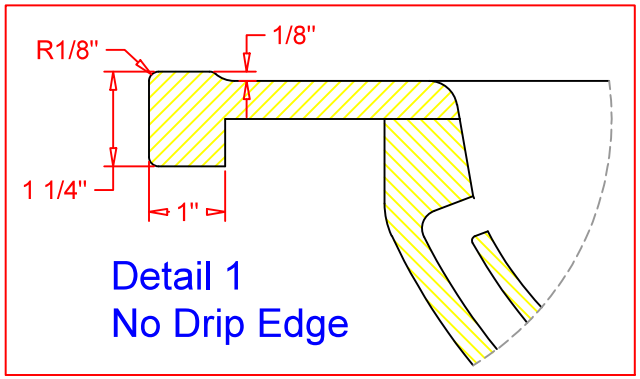

NOTES:

TYPE A 1st & 2nd Floors

QTY: 14 Pieces.

Color: Deck Surf White # 74 / Bowl White # 09

1. Bowl is 7LSU01612.
2. Front Edge 1 1/4" Build Up with No Drip Edge.
3. Loose Back Splash 3/4" x 6" x 65"
4. Packed with 2 Loose Side Splashes (L&R) 3/4" x 6" x 22 1/8"

Customer Approval: Date:

Path: @Engineering\

WILTCHER INDUSTRIES, INC.
EST. 1963
1034 Sudbury Lane
Ormond Beach, FL 32174
(704) 907 9838
www.wiltcherindustries.com

Part Number:	7TITB2465TYPE A / TAMU Dunn Hall Phase II				
Description:	Type A Double Bowl Vanity Top 24" x 65" / Overall Dimensions / Details				
Date Drawn:	10 / 17 / 2023	Weight:		Scale:	None
Drawn By:	Carlos Hernandez			Revised By:	
Approved By:				Date Revised:	